TN 295
.U4

No. 8754
1977

IC 8754

Bureau of Mines Information Circular/1977

4 - NOV - 7
COPY 1 1977

Noise Dosimeter Performance—A Second Evaluation

UNITED STATES DEPARTMENT OF THE INTERIOR

(US Bureau of Mines)

Information Circular 8754

Noise Dosimeter Performance– A Second Evaluation

By Timothy Y. Yen and Kenneth C. Stewart

UNITED STATES DEPARTMENT OF THE INTERIOR
Cecil D. Andrus, Secretary

BUREAU OF MINES

This publication has been cataloged as follows:

Yen, Timothy Y

Noise dosimeter performance—a second evaluation / by Timothy Y. Yen and Kenneth C. Stewart. [Washington] : U.S. Dept. of the Interior, Bureau of Mines, 1977.

39 p. : ill., diagrams ; 27 cm. (Information circular - Bureau of Mines ; 8754)

Bibliography: p. 34.

1. Noise—Measurement. 2. Coal mines and mining—Noise control. I. Stewart, Kenneth C., joint author. II. United States. Bureau of Mines. III. Title. IV. Series: United States. Bureau of Mines. Information circular - Bureau of Mines ; 8754.

TN23.U71 no. 8754 622.06173

U.S. Dept. of the Int. Library

CONTENTS

	Page
Abstract	1
Introduction	1
Acknowledgments	3
Development of test methodology	3
Defining dosage	3
Components of a dosimeter	4
Model of dosimeter	5
Responses to constant-level pure-tone stimuli	5
Responses to fluctuating stimuli	8
Tone burst stimuli	9
Noise stimuli	9
Power consumption	10
Generation of the sound field	11
The experimental design	11
Blocking the experiment	11
Placement of the microphones	12
Calibrating the monitoring system	12
Correction for dosimeter microphone response characteristics	15
The test procedure	15
Determining the frequency response	15
Determining the tradeoff rate	16
Crest-handling capability	16
Tone burst test	16
Broadband noise test	17
Battery life span	17
Presentation of results	18
Experimental error	30
Conclusions	32
References	34
Appendix A.--Nomenclature	35
Appendix B.--Normal versus random incidence responses of microphones	37
Appendix C.--Supplementary information on dosimeters	39

ILLUSTRATIONS

1.	Block diagram of the system used to generate test sound fields	11
2.	Block diagram of the monitoring system	13
3.	Block diagram of insert voltage system	14
4.	Tone burst stimuli	17
5.	Typical octave band spectrum of the broad band test stimulus	17

TABLES

1.	Characteristics of dosimeters acquired for testing	2
2.	Sound-level meter A-weighted, random-incidence relative response level as a function of frequency and tolerance limits	4
3.	Crest factor and reduction in the effective level in db for selected values of U	9

TABLES--Continued

Page

4. Assigning of dosimeters into blocks..... 12
5. Corrections in db for the monitoring system..... 13
6. Corrections due to microphone diffraction effect..... 15
7. Test durations for various sound levels..... 16

Acoustic performance of--
8. Bendix dosimeters..... 19
9. Bruel and Kjaer dosimeters..... 20
10. Columbia Research dosimeters..... 21
11. E. I. DuPont dosimeters..... 22
12. Edmont-Wilson dosimeters..... 23
13. General Radio dosimeters..... 24
14. Quest dosimeters..... 25
15. Tracoustics dosimeters..... 26
16. Triplett dosimeters..... 27
17. Welsh dosimeters..... 28

18. Frequency responses of a Bruel and Kjaer dosimeter with and without a microphone cable..... 29
19. Battery life expectancies..... 29
20. Replication error e at different frequencies..... 31
21. Estimated parameters of experimental error..... 32
22. Replication error e at different sound levels..... 32
B-1. Difference between normal incidence response S_{normal} and random incidence response S_{random} for three microphones..... 37

NOISE DOSIMETER PERFORMANCE–A SECOND EVALUATION

by

Timothy Y. Yen[1] and Kenneth C. Stewart[1]

ABSTRACT

This Bureau of Mines report evaluates audio dosimeters, 3 sample units from each of 10 currently marketed brands. Each dosimeter was treated as a "black box" with the acoustic stimulus as the input and the accumulated dosage as the output. The dosimeter microphones were exposed to a sound field generated in an anechoic chamber. Characteristics evaluated include frequency response (100 to 8,000 Hz), level-time tradeoff rate (88 to 117 db), status of calibration, crest-handling capability, and power consumption rate. Experimental errors revealed by replication of the tests were found to be generally much smaller than variations in performance among the samples of any brand, and possibilities of further reducing the magnitude of these errors are discussed.

INTRODUCTION

The concept of dosage for noise exposure has received general acceptance following an amendment to the Walsh-Healey Public Contract Act in 1969. According to the rules promulgated under the Coal Mine Health and Safety Act of 1969, the noise dosage is to be evaluated according to a certain level versus time tradeoff rule. The precise implementation of that formula would require a detailed sound-level record to be kept for a worker for an entire work shift. Since the sound level in the work environment is rarely constant, the task is thus quite tedious. A device designed to automatically register the accumulated dosage according to a prescribed level-time tradeoff rule is known as an "audio-dosimeter" or a "noise dosimeter" and is merely referred to as a "dosimeter" in this report.

In 1973 the authors conducted a series of tests to evaluate the acoustical performance of a number of dosimeters available at that time. The results

[1]Both authors are faculty advisors, Pittsburgh Mining and Safety Research Center, Bureau of Mines, Pittsburgh, and are associated with the Department of Industrial Environmental Health Sciences, Graduate School of Public Health, University of Pittsburgh, Pittsburgh, Pa.

of those tests have already been reported (1).[2] Since that time, a number of new designs have become commercially available, while a number of old models have disappeared from the market. It is thus deemed appropriate to carry out a new round of tests on the currently marketed dosimeters.

A total of 30 dosimeters, 3 sample units from each of 10 manufacturers, have been procured by the Bureau of Mines for the current evaluation. The brands of dosimeters included in the program are identified in table 1. Characteristics of these instruments which may have a bearing on the design of the test procedure are also included in the table. For supplementary information see appendix C.

TABLE 1. - Characteristics of dosimeters acquired for testing

Brand name	Brand designation	Model	Microphone diameter, inches	Readout	Battery type[1]	Battery check
Bendix.....	A	1150...	1-1/8	Indirect	Two 1600....	Yes[2]
Bruel and Kjaer..	B	4425...	1/2	Direct..	Two 1604....	Yes[3]
Columbia Research	C	SPL-105	15/16	...do...	One 1600....	Yes[3]
E. I. DuPont.....	D	D 100..	1-1/8	Indirect	One 1604....	Yes[3]
Edmont Wilson....	E	60-520.	1-1/8	Direct..	Rechargeable	Yes[3]
General Radio[4]...	F	1944...	1/2	Indirect	One 1604....	Yes[2]
Quest.....	G	M-6....	1-1/8	Direct..	Rechargeable	Yes[3]
Tracoustics.....	H	ND-100.	1-1/8	Indirect	...do.....	No
Triplett.....	I	376....	15/16	Direct..	One 1600....	Yes[3]
Welsh.....	J	SPL-104	15/16	Indirect	Two 215.....	Yes[3]

[1]National Electronic Distribution Association (NEDA) designation.
[2]On readout unit.
[3]On monitor unit.
[4]Built-in microphone optional.

The objectives of the tests are to determine for each dosimeter its characteristics regarding--

1. Dosage accumulation upon exposure to steady acoustic stimuli.

2. Dosage accumulation upon exposure to fluctuating acoustic stimuli.

3. The rate of power consumption.

Other operational features that may be of interest to a user will also be noted in the report. The methodology developed for the current series of tests is different from that of the previous procedure in many aspects. The most significant departure made in the current methodology is the treatment of the entire dosimeter including its microphone as a "black box." The input to the black box is an acoustic stimulus, while the accumulated dosage is its sole output. The treatment of the dosimeter in this manner allows the

[2]Underlined numbers in parentheses refer to items in the list of references preceding the appendixes.

employment of test procedures that can be uniformly adhered to regardless of the design of the dosimeter. This approach would also do away with any unavoidable "tampering" with the dosimeters if they were to be tested in "parts." One disadvantage of the present approach is the loss of information regarding the behavior of specific components of the dosimeters. The advantages should outweigh possible disadvantages in an evaluation program that is our concern here.

ACKNOWLEDGMENTS

The authors wish to thank Dr. Kenneth Sacks of the Bureau of Mines and Mr. Dennis Giardino of the Mining Enforcement and Safety Administration for their many helpful discussions during the planning of the present round of tests. Thanks are also due to Mr. Barry Wible, a graduate student in Environmental Acoustics at the University of Pittsburgh, for his care in carrying out most of the tests. Make and type of equipment utilized in the test are provided for documentation purposes only and do not imply endorsement by the Bureau of Mines.

DEVELOPMENT OF A TEST METHOD

Defining Dosage

A present Federal regulation, promulgated under the Coal Mine Health and Safety Act of 1969, set definite limits on the extent of exposure of mine workers to noise in their work environment. The intent of the regulations is to minimize, as far as is feasible, the risk of workers sustaining significant losses of hearing acuity as a result of work-related noise exposures. The regulation recognizes the varying degree of harmful effect of tones of different frequencies and intensities and adopts a certain frequency weighting characteristics, and a time-level tradeoff rule for calculating the noise dosage accumulated over the period of a work shift.

Specifically, the dosage D (in percent of the maximum allowed) produced by a sound of a constant level is to be calculated, according to the regulations (2), from the following formula:

$$\begin{aligned} D &= 0; && L_A < 90 \text{ db}, \\ D &= 100\,\frac{t}{8}\,2^{\frac{L_A - 90}{5}}; && 90 \text{ db} \leq L_A \leq 115 \text{ db}, \\ D &> 100; && L_A > 115 \text{ db}, \end{aligned} \tag{1}$$

in which t is the time in hours and L_A is the A-weighted sound level in db determined according to the American National Standard Institute (ANSI) specifications (3). The denominator with a value of 5 in the exponent of equation 1 is known as the tradeoff or exchange rate. It denotes the number of additional decibels of sound permitted with a halving of the exposure time.

If the intensity of the sound is not concentrated at a single frequency but is spread among a number of frequencies, the A-weighted sound level may be obtained as

$$L_A = 10 \log \sum_{i=1}^{N} \log^{-1} \frac{L_i + A_i}{10} . \quad (2)$$

In the above equation the logarithm is taken with respect to the base of 10, L_i is the unweighted sound pressure level of the component i in db and A_i is the corresponding A-weighting correction in db as specified by ANSI, and N is the total number of components. The ANSI values of A_i and the permissible tolerances at the center frequencies of the standard one-third octave bands from 100 to 8,000 Hz are reproduced in table 2. These frequencies cover the range that is of significance in a typical work environment.

TABLE 2. - Sound-level meter A-weighted, random-incidence relative response level as a function of frequency and tolerance limits (3)

Frequency, Hz	A-weighting relative response, db	Total tolerance limits for type 2 sound-level meter, db
100	-19.1	±2.5
125	-16.1	±2.5
160	-13.4	±2.5
200	-10.9	±2.5
250	-8.6	±2.5
315	-6.6	±2.0
400	-4.8	±2.0
500	-3.2	±2.0
630	-1.9	±2.0
800	-.8	±1.5
1,000	0	±2.0
1,250	+.6	±2.0
1,600	+1.0	±2.5
2,000	+1.2	±3.0
2,500	+1.3	+4.0, -3.5
3,150	+1.2	+5.0, -4.0
4,000	+1.0	+5.5, -4.5
5,000	+.5	+6.0, -5.0
6,300	-.1	+6.5, -5.5
8,000	-1.1	+6.5, -6.5

Components of a Dosimeter

Basically, a dosimeter can be considered to consist of three cascading sections: (1) A "transduction section" that transduces the acoustic input to the microphone into a suitably modified electrical signal; (2) a "rectification section" which converts the electrical signal into its effective or root-mean-squared (rms) value; and (3) an "integrating section" that computes the dosage

accumulated over a time period according to a prescribed tradeoff rate. For dosimeters that conform to the Coal Mine Health and Safety Act, the appropriate tradeoff rule is that given by equation 1.

Model of Dosimeter

Ideally, a dosimeter when exposed to a stimulus at a constant level should yield dosage readings strictly according to equation 1. In reality, the dosage readout R (in percent) given by a dosimeter will differ from the actual dosage D for a given stimulus. The possible sources of departure are in the areas of frequency weighting, tradeoff rate, and calibration. All these deviations can be properly accounted for by expressing R in the following manner:

$$R = 100 \frac{t}{8} 2^{\frac{L_A' + \beta - 90}{5}}, \tag{3}$$

where

$$L_A' = 10 \log \left[\sum_{i=1}^{N} \log^{-1} \frac{L_i + A_i + \alpha_i}{10} \right] + \gamma . \tag{4}$$

In the above equations, α_i is the deviation in weighting (in db) at the associated frequency and is thus generally frequency dependent. The parameter β reflects the deviation from the tradeoff rate (in db) and hence depends on the level L_A, and γ (in db) is a constant for a given dosimeter as determined by its sensitivity setting. The magnitudes of these parameters will, in general, vary from dosimeter to dosimeter and will thus serve to characterize a given dosimeter.

It is worthy of noting here that in adopting this model three assumptions had specifically been made. The first assumption is that holding all other parameters constant, the readout of a dosimeter is always (linearly) proportional to the exposure time. The second assumption is that the exchange rate intrinsic to a dosimeter is not affected by the spectral content of the stimulus. The last assumption is that when exposed to a complex sound, the dosimeter will combine the component parts on the basis of the component intensities appropriately summed. Based on our experience with dosimeters in general, the first two assumptions appear to be justified. The problem with the third assumption can be ignored for the moment but will be attended to in a subsequent section.

Responses to Constant-Level Pure-Tone Stimuli

If the input stimulus to a dosimeter is a pure tone of frequency f_i and level L_{ij}, then equation 4 simplifies to

$$\left(L_A' \right)_{ij} = L_{ij} + A_i + \alpha_i + \gamma . \tag{5}$$

With the aid of equations 1 and 2, equation 3 becomes

$$R_{ij} = 2^{\gamma/5}\, 2^{\alpha_i/5}\, 2^{\beta_j/5}\, D_{ij}, \tag{6}$$

where R_{ij} is the dosage reading provided by the instrument, D_{ij} is the dosage computed according to equation 1 and β_j is the value of β at the corresponding sound level.

Equation 6 can be more conveniently written as

$$R_{ij} = CF_i\, G_j D_{ij}, \tag{7}$$

$$\text{in which } C = 2^{\gamma/5}, \tag{8a}$$

$$F_i = 2^{\alpha_i/5}, \tag{8b}$$

$$G_j = 2^{\beta_j/5}. \tag{8c}$$

The constant factor C, and hence the associated γ, obviously depends on the sensitivity setting of the instrument and can thus be interpreted as the calibration factor. The introduction of the calibration factor permits a comparison of the main features of a dosimeter against a standard or against other dosimeters independent of the status of calibration of the instruments.

The magnitude of the parameters C, F_i, and G_j are not fixed until a normalization procedure is adopted. Since an ideal dosimeter would have, for all i and j,

$$F_i = G_j = 1,$$

it is reasonable then to stipulate that the mean values of F_i and G_j be unity, that is

$$\frac{1}{m} \sum_{i=1}^{m} F_i = 1, \tag{9a}$$

$$\frac{1}{n} \sum_{j=1}^{n} G_j = 1, \tag{9b}$$

in which m is the total number of test frequencies and n is the total number of test levels.

The above analysis suggests that in order to determine the parameters C, F_i, G_j for a given dosimeter it suffices to record the dosage readings upon exposure to a pure-tone stimulus at a fixed level for all the frequencies of interest and those readings at a fixed frequency but for different sound levels.

To demonstrate the procedure, consider the particular pair of choices as follows:

$$i = a, \quad j = b.$$

For these choices

$$R_{aj} = CF_a G_j D_{aj}, \tag{10a}$$

and

$$R_{ib} = CF_i G_b D_{ib}. \tag{10b}$$

On account of equation 9, upon averaging respectively over the test levels and the test frequencies,

$$CF_a = \frac{1}{n} \sum_{j=1}^{n} \frac{R_{aj}}{D_{aj}}, \tag{11a}$$

$$CG_b = \frac{1}{m} \sum_{i=1}^{m} \frac{R_{ib}}{D_{ib}}. \tag{11b}$$

It then follows from equation 10 that

$$G_j = \frac{1}{CF_a} \frac{R_{aj}}{D_{aj}}, \tag{12a}$$

$$F_i = \frac{1}{CG_b} \frac{R_{ib}}{D_{ib}}, \tag{12b}$$

in which the values of CF_a and CG_b are to be determined according to equation 11.

In order to determine C, the value

$$R_{ab} = CF_{ab} F_a G_b$$

must be available which yields

$$C = \frac{1}{F_a G_b} \frac{R_{ab}}{D_{ab}}. \tag{12c}$$

The values of γ, α_i, β_j can be calculated from equation 8 once the corresponding values of C, F_i, and G_j are known.

Responses to Fluctuating Stimuli

Once the response of a dosimeter has been adequately characterized for pure tones in the manner described in the preceding section, ideally its responses to complex tones should be deducible through the use of equations 3 and 4. A subtle difficulty arises here however. The difficulty is caused by occasional high peaks in the signal wave form. The severity of these peaks should be measured against the rms value of the signal, hence the definition of the following crest factor (C.F.):

$$C.F. = \frac{p_{max}}{p_{rms}} , \tag{13}$$

in which P_{max} is the maximum amplitude of the signal p and p_{rms} is its rms amplitude.

A pure tone stimulus has a crest factor of $\sqrt{2}$, while the crest factor of commonly encountered acoustic stimulus would invariably have a crest factor value greater than that. In general, the rms value of a signal as measured by an instrument is expected to deviate more from its "true" rms value the greater its crest factor is. How well can an instrument maintain its accuracy in measuring the rms level with increasing crest factors is known as its crest-handling capability.

Many kinds of stimulus may be employed to evaluate the crest-handling capability of a dosimeter. For experimental expediency tone bursts as a test stiumulus shall be used in our procedure. Broadband noise stimuli will also be used for comparative purposes. In either case, the dosage output must be properly normalized to exclude extraneous effects caused by improper calibration, weighting, or tradeoff rate. This means that the actual dosage reading R of a dosimeter is to be compared against the hypothetical reading R_o the device would have produced if it had adequate crest-handling capability but were unchanged regarding its other characteristics. R_o may be calculated from equations 4 and 3 given the spectrum of the stimulus. The crest-handling characteristics of a dosimeter can thus be measured by the ratio R/R_o and can, in analogy to equation 8, be expressed in terms of δ (in db) in the form

$$\frac{R}{R_o} = 2^{\delta/5} . \tag{14}$$

Thus, if the effect of a higher crest factor (than that for pure tone) is included, equation 3 should be amended to read

$$R = 100 \frac{t}{8} 2^{\frac{L_A' + \beta + \delta - 90}{5}} . \tag{15}$$

Tone Burst Stimuli

A tone burst is a tone presented at fixed intervals (duty cycle) for a fraction of the interval (percent on-time); silence prevails during the remainder of the interval. The crest factor of tone bursts can be computed given the ratio of the on-time to the duty cycle of the stimulus. Denoting the percent on-time as U, one can define an effective amplitude P_e of the stimulus p as

$$p_e = p_{rms}\sqrt{\frac{U}{100}}, \tag{16}$$

where P_{rms} is the rms amplitude of p if it were continuous. If the peak amplitude of p is P_p then, since $P_p/P_{rms} = \sqrt{2}$, the crest factor is

$$C.F. = \frac{p_p}{p_e} = \sqrt{\frac{200}{U}}. \tag{17}$$

Thus both P_e and C.F. can be readily calculated if the values of P_{rms} and U of of the tone burst are known. The C.F. and the ratio of P_e to P_{rms} in db for selected values of U are given in table 3. Also indicated in the same table are the drop in sound level (as indicated by the heading of the last column) for each value of U holding the peak amplitude of the stimulus constant.

TABLE 3. - Crest factor and reduction in the effective level in db for selected values of U

U, percent	Crest factor	10 log $(P_e/P_{rms})^2$, db
100.....	1.41	0
60.....	1.83	-2.2
40.....	2.24	-4.0
20.....	3.16	-7.0
10.....	4.47	-10.0

Noise Stimuli

If the input stimulus is a "noise," the crest factor cannot be readily computed. Indeed, given a sufficiently long time, a crest factor of any magnitude can theoretically be achieved. There are, of course, physical determinants which will limit the practically realizable crest factor values. The crest factor of a noise stimulus is best determined through measurements. From the measured peak and rms levels the crest factor may be computed according to the formula

$$C.F. = 10^{\frac{L_{max} - L_{rms}}{20}}, \tag{18}$$

in which L_{max} is the measured peak level and L_{rms} the measured rms level of the stimulus.

Since in this case the intensity of the stimulus is spread over a range of frequencies, the spectral content of the stimulus needs to be ascertained. Knowing the spectral content of the stimulus and the frequency response of the dosimeter a theoretical dosage reading R_o for the given dosimeter can be calculated according to equations 3 and 4. Letting the actual dosage reading be denoted by R, equation 14 can again be utilized to define the performance of the dosimeter.

Power Consumption

All dosimeters tested in this project are battery-powered units. From the user's point of view the duration of satisfactory operation with a fresh or freshly charged powerpack is a matter of practical importance. To make a battery change in the middle of a survey is often inconvenient and, in addition, such an action may wipe out already accumulated dosage unless it is read and properly recorded (see appendix C).

To facilitate the discussion, the service life of a "fresh" battery pack shall be denoted as its "primary" life span. The cutoff time for the service life will be determined according to the manufacturer's specified procedure, if available. The remaining life span following this cutoff time until malfunctioning of the dosimeter is indicated will be termed its "residual" life span. For a given powerpack the total life span is then the sum of the primary and the residual life spans. For an instrument that is not provided with a battery check feature or for which malfunctioning occurred prior to the cutoff time, the residual life span will be considered as zero and the total life span, its primary life span.

It is reasonable to demand a primary life span of at least 8 hours, the duration of a regular work shift. It also is logical to require the residual life span to be at least as long as a work shift to avoid any possible loss of data.

The goal of this portion of the test is to determine both the primary and the residual service life spans of the powerpack called for or supplied by each make of dosimeters. Many dosimeters are supplied with rechargeable powerpacks while others use dry cells. To economize on the test time, different procedures were followed for the two different types of power supply.

For dosimeters that run on rechargeable batteries the battery life spans following a full charge (charged at least 14 hours) were determined by allowing the instruments to operate continuously in a sound field but were checked frequently until the battery was spent. A spent battery was arbitrarily defined as being indicated by a dosimeter response that deviated by 10 percent from its normal response.

For dosimeters that run on dry cells the electric current draw at rated battery voltages was measured. A calibrated dc power supply was used instead

of batteries for decreasing voltage settings until the voltage had been reached at which the dosimeter response deviated by more than 10 percent from its normal response. The expected life span of an actual battery was estimated from such data and the appropriate battery charts.

GENERATION OF THE SOUND FIELD

Each of the sound fields employed in this study was generated in the anechoic chamber of the Graduate School of Public Health, the University of Pittsburgh. The anechoic chamber was a double-walled concrete structure employing wedges 4 feet in length constructed of 3.25 lb/ft^3-density fiberglass. The entire chamber was wedge-covered with the exception of an area occupied by the loudspeaker cabinet which fits over a portion of one door. The chamber's low-frequency cutoff was approximately 100 Hz. The working space inside the chamber was a 16-foot cube. The floor of the chamber was constructed of cable wires spaced 2 inches both ways. Free field measurements in the chamber demonstrated that the inverse square law for intensity existed for all frequencies in the range from 100 to 12,000 Hz.

The sound field was generated with a loudspeaker with separate low- and high-frequency components. The low-frequency element consisted of a 15-inch-diameter woofer and a short exponential coupler; the back side of the woofer cone is connected to a ducted port above the cone. The high-frequency element is a driver coupled to a multicellular exponential horn. The crossover frequency is slightly below 1,000 Hz. For certain tests only one of the sound-generating elements is used at a time, while for others both units are employed simultaneously. The setup used in various phases of the test is described in figure 1.

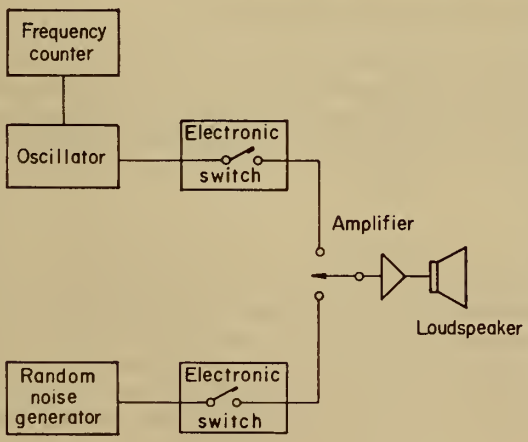

List of equipment:
Oscillator, Bruel and Kjaer, type 1022
Frequency counter, Hewlett Packard, type 5212A
Electronic switch, Grason-Stadler, type 829E
Amplifier, Dynaco, type Stereo 120
Random noise generator, General Radio, type 1382
Loudspeaker, Altec Lansing, type A7

FIGURE 1. - Block diagram of the system used to generate test sound fields.

EXPERIMENTAL DESIGN

Blocking the Experiment

The instruments were tested in blocks with four to a block. A complete test run was performed on each block of instruments as they became available. The entire experiment consisted of 10 blocks. Since there

were a total of 30 instruments, 3 from each of 10 brands, this meant that there were 10 replications in all. The 10 replications were distributed evenly among the 10 brands; that is, each brand had one of the samples replicated. The instruments in each block are identified in table 4.

TABLE 4. - Assigning of dosimeters into blocks

Test block:	Dosimeter identification[1]
1	E1, E2; H2, H3.
2	C1, C2; J1, J3.
3	E2, E3; F2, F3.
4	G1, G3; I1, I3.
5	D1, D3; B2, B3.
6	J2, J3; C1, C3.
7	F1, F3; G2, G3.
8	A1, A3; H1, H2.
9	D1, D2; I2, I3.
10	A2, A3; B1, B3.

[1]The symbol identifies the brand of the dosimeter (see table 1) and the sample unit of each brand.

Placement of the Microphones

For most tests the microphones of the dosimeters under test were arranged symmetrically around a circle with a diameter of 2 feet. The plane of the circle was parallel to the plane of the speaker cabinet and was placed about 6 feet therefrom. The center of the circle coincided with the center of the high-frequency horn which was about 3 feet above the wire grid floor of the chamber.

For tests at the highest level (117 dbA) it was necessary to move the microphones closer to the loudspeaker. To achieve a more uniform distribution of the sound level, the microphones were then mounted 6 inches apart on a horizontal bar which was placed perpendicular to the axis of the horn, about 3 feet from the face of the speaker, and about 3 feet above the wire floor. At test frequencies of 100, 125, and 160 Hz it was necessary to move the bar to within a foot of the speaker cabinet and to about a foot from the wire floor.

The dosimeter microphones were randomly matched to the slots for each test frequency and each test level. Care was taken to arrange the microphones so that their axes would be perpendicular to the face of the speaker.

Calibrating the Monitoring System

The sound field inside the test chamber was established with a monitor system as shown in figure 2. The calibration of the monitoring system was achieved through comparison against the response of a laboratory standard Western Electric WE-640-AA microphone operated with the insert voltage technique.

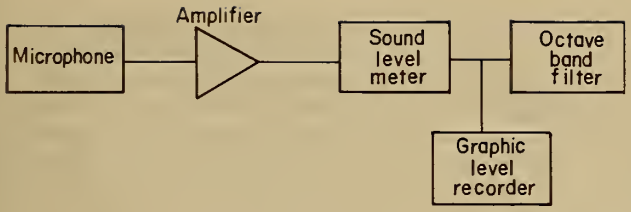

List of equipment:
Microphone, Bruel and Kjaer, type 4145
Preamplifier, Bruel and Kjaer, type 2619
Sound level meter, Bruel and Kjaer, type 2209
Octave band filter, Bruel and Kjaer, type 1613
Graphic level recorder, General Radio, type 1521 B

FIGURE 2. - Block diagram of the monitoring system.

The insert voltage technique, together with the reciprocity pressure calibration data corrected for free-field response (see table 5), is probably the most widely accepted method for the precision measurement of sound fields. In essence, the method depends upon a comparison of two open circuit voltages generated at the terminals of the WE 640-AA microphone. One of the open-circuit voltages is generated by the sound field, and the other by an oscillator in conjunction with a precision attenuator. In practice, the precision attenuator usually consists of three decades having steps of 10, 1, and 0.1 db. The signal voltage at the attenuator input terminals is conveniently maintained at 1 volt, since microphone calibration data is usually expressed in db relative to 1 volt/dyne/cm^2.

TABLE 5. - Corrections in db for the monitoring system

Frequency, Hz	WE 640-AA calibration data, db re 1 volt/dyne/cm^2	Corrections in db for the monitoring system	
		Linear	Octave band
100	-50.4	0.0	-
125	-50.4	.0	-0.3
160	-50.4	.0	-
200	-50.4	.0	-
250	-50.4	-.2	-.3
315	-50.4	-.2	-
400	-50.4	-.1	-
500	-50.4	-.2	-.2
630	-50.4	.0	-
800	-50.3	-.1	-
1,000	-50.1	-.1	-.3
1,250	-49.9	-.2	-
1,600	-49.6	-.2	-
2,000	-49.0	-.4	-.6
2,500	-48.4	-.9	-
3,150	-47.5	-1.0	-
4,000	-46.2	-1.0	-1.6
5,000	-44.7	-1.9	-
6,300	-43.1	-2.4	-
8,000	-41.9	-3.0	-2.6
10,000	-42.5	-2.0	-

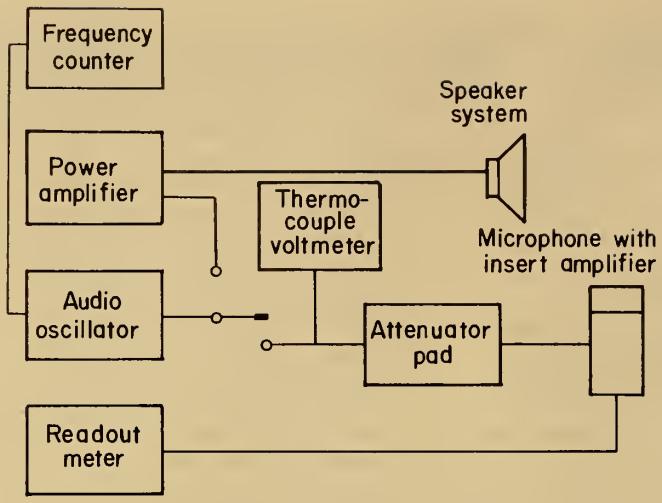

List of equipment:
Microphone, WE640AA Ser. No. 1381
Alternator, Daven, type T-692
Thermocouple voltmeter, Weston, type 622
Readout meter, Bruel and Kjaer, type 1022
Oscillator, Hewlett Packard, type 302C
Frequency counter, Hewlett Packard, type 5212A

FIGURE 3. - Block diagram of insert voltage system.

A block diagram of the insert voltage system employed in this project is shown in figure 3. At a given frequency, a sound field level was established as follows: From the WE 640-AA calibration data (given in table 5) an open-circuit voltage was calculated which corresponded to a given sound pressure level. This voltage was expressed in decibels relative to 1 volt. With 1 volt (as determined by a thermal couple voltmeter) applied to the attenuator input terminals, the attenuator was adjusted to the level calculated above. A convenient reading was noted on the readout meter. The insert signal was then switched off and the sound field was adjusted to produced the same readout as previously obtained with the insert signal. Since the insert method utilizes a "balancing" technique, the accuracy of the method does not depend upon the accuracy of the readout meter. The requirement was simply instrument stability for the short period of time necessary to switch from the insert voltage to the voltage generated by the sound field.

The monitor microphone was mounted side by side with the WE 640-AA microphone and was thus exposed essentially to the same known sound field. The calibration of the monitoring system can thus be established. To allow for possible small differences between the sound pressures acting on the diaphragms of the microphones, the two microphones then swapped positions. The sound pressure on the laboratory standard microphone was again brought to the predetermined value. The calibration data for the monitoring system was arrived at by taking the mean values of the two sets of readings obtained with the monitoring system. The corrections that were found applicable to the monitoring system are displayed in table 5.

Correction for Dosimeter Microphone Response Characteristics

The monitor microphone has a diameter of a fifteen-sixteenth of an inch. Dosimeter microphones came in three different diameters (see table 1). In principle, microphones of different diameters will be subject to different magnitudes of sound pressure when placed in the same sound field as a result of the wave nature of sound. Allowances must therefore be made to account for any such difference between the monitor microphone and the dosimeter microphone. Since the ANSI specification for the A-weighted response applies to a randomly incident sound field, it is logical to "standardize" the dosimeter response to that corresponding to a randomly incident sound field.

All dosimeters were received with remote microphones. The necessary corrections can be obtained from published data on microphones of comparable sizes. In general, no corrections were necessary for frequencies up to about 1,000 Hz. The corrections employed for making dosage computations are shown in table 6. The correction given for a given microphone at a given frequency was added to the sound pressure level measured with the monitoring system to obtain the level appropriate to that microphone. For a derivation of table 6 see appendix B. No corrections were applied to the Bruel and Kjaer dosimeter data obtained with a directly coupled microphone as the necessary information was not available.

TABLE 6. - Corrections due to microphone diffraction effect

Frequency, Hz	Microphone diameter, inches		
	1-1/8	15/16	1/2
1,600	0.0	0	-0.2
2,000	.0	0	-.5
2,500	.0	0	-.7
3,150	.0	0	-1.0
4,000	+.2	0	-1.2
5,000	+.4	0	-1.5
6,300	+.7	0	-1.8
8,000	+1.0	0	-2.0

THE TEST PROCEDURE

Determining the Frequency Response

The test frequencies were those at the centers of standard 1/3-octave bands ranging from 100 to 8,000 Hz as listed in table 2. In each test run, the four dosimeter microphones were randomly matched to the test locations with their axes perpendicular to the plane of the loudspeaker. The nominal test level L_A was 100 dbA. To obtain the desired sound level at the lowest frequencies (namely, 100, 125, and 160 Hz) the microphones were placed at about 1 foot from the face of the speaker cabinet. At higher frequencies, a distance of about 6 feet was maintained to insure a reasonably straight wave front.

Before a test run was started, the precise sound pressure level to which each dosimeter microphone was exposed was established by substituting each microphone in turn with monitor microphone with the other three dosimeter microphones in place. Care was taken to position the monitor microphone exactly as the test microphone. The levels seen by individual microphones deviated in general less than 1 db from the specified level. During a test run the monitor microphone remained in the chamber at a convenient location and its output was recorded continuously on a graphic level recorder to verify the constancy of the stimulus. The same procedure was followed in all other tests for which a sound field was to be maintained.

The test duration was 1/2 hour. At the end of a test run all dosage readings were recorded. The microphones were then randomly matched to the test position for the succeeding test.

Determining the Tradeoff Rate

To determine the level-time tradeoff rate, a test tone of 1,000 Hz was utilized. The nominal test levels and the respective exposure times are shown in table 7.

TABLE 7. - Test durations for various sound levels

Sound level, db:	Test time, hour
88	1
92	2
95	1-1/2
105	1/2
110	3/10
113	2/10
117	2/10

All dosimeters in this project incorporated an overexposure warning light designed to be triggered when the sound level reaches 115 dbA. The on- or off-status of the 115 dbA warning light of each dosimeter was noted at all test levels.

Crest-Handling Capability

Tone Burst Test

A 1,000-Hz tone burst was used for the tests. The dosimeter microphones were placed at about 3 feet from the face of the speaker cabinet. The initial test signal was a continuous 1,000-Hz tone at about 115 dbA. After this initial run a tone interruptor was used to produce a signal of a selected on-off cycle (table 3). To avoid popping the loudspeaker the tone bursts were applied with a 5-msec rise time and a comparable delay time. The actual waveforms are shown in figure 4, the top trace being the electrical signal, the lower trace, the acoustic stimulus. The tone was repeated at an interval of 250 msec. This time was long enough so that spectral spreading would be

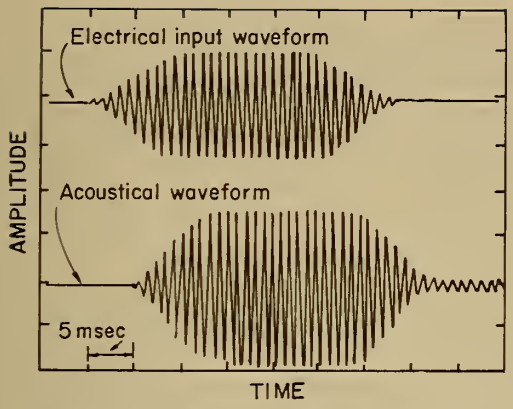

FIGURE 4. - Tone burst stimuli.

negligible, yet short enough so that a steady meter reading could be maintained on the monitor sound level meter with a "slow" response characteristic. The crest factor was measured with the monitoring system as previously described. The measured crest factors were about 10 percent larger than those indicated in table 3, possibly as a result of the finite rise and decay times. The test duration for each stimulus was 12 minutes. Each dosimeter microphone remained in a fixed position in this phase of the test.

Broadband Noise Test

In the test setup, a thermal noise source served as the input to the loudspeaker. A nominal test level of about 115 dbA was used. The octave-band levels to which the test microphones were exposed were measured with the monitor microphone in substitution and an octave-band analyzer meeting ANSI type 1 specification. A typical spectrum of the stimulus is shown in figure 5. The crest factor of the test signal was measured in the previously described manner and was found to be in the range of 4.0 to 4.6 with an average value of 4.3. The test duration was again 12 minutes.

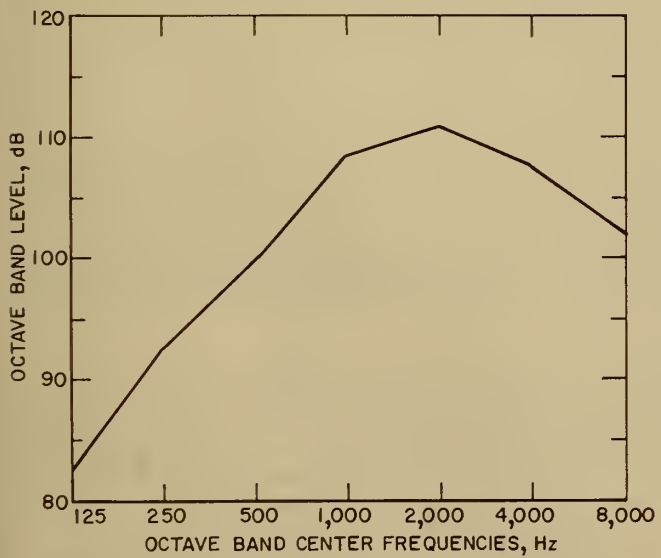

FIGURE 5. - Typical octave band spectrum of the broadband test stimulus.

Battery Life Span

The test procedure followed closely the methodolgy previously described.

A dosimeter that used a rechargeable battery was first charged overnight (about 14 to 15 hours) and was then tested by exposing the microphone to a sound field of about 100 dbA. The dosage reading was recorded at 2-1/2-hour intervals. The state of the battery condition indicator was noted each time a reading was taken and the register was returned to zero before resuming the test. The test was stopped after 10 hours and was then resumed after an overnight pause with the instrument turned off without being recharged. The readings were then taken at an hourly interval until a deviation of more than 10 percent had been reached.

A dosimeter that used dry cell(s) was tested by replacing the dry cell(s) with a precalibrated dc power supply. The current draw across a single cell was then measured at the rated voltage with the unit turned on but without any dosage being accumulated. The microphone was then subject to a calibrating tone for a sufficiently long time until a dosage accumulation of about 10 percent was achieved. The register was then returned to zero and the voltage lowered at 1/2-volt steps (1-volt steps for 22-1/2-volt battery). Each time the dosage reading was recorded after the calibrating tone had been on for the same duration. The procedure was repeated until a deviation in dosage reading of more than 10 percent from the initial reading had resulted.

PRESENTATION OF RESULTS

The results of the test are compiled in tabular forms. The acoustic performances of individual dosimeters are presented in tables 8 through 17, alphabetically according to brand. When a dosimeter was replicated, the data shown correspond to the mean dosage readings of the two replications. The sample mean values were obtained by arithmetically averaging the dosage readings across the three samples (two samples in isolated cases) with equal weight assigned to all three samples. In other words,

$$\overline{F} = \frac{1}{3}\left(F_{\text{sample 1}} + F_{\text{sample 2}} + F_{\text{sample 3}}\right) = 2^{\overline{\alpha}/5}.$$

Thus, $\overline{\alpha}$ is not the average value of the sample α's. Other sample mean values were obtained in the same manner.

Table 2 also contains the A-weighting tolerance limits on the random incidence frequency response for ANSI type 2 sound level meters over the frequency range covered in the test. The α values obtained for each dosimeter should be compared against these tolerance limits.

The Bruel and Kjaer dosimeters that were provided for testing had a socket for directly attaching the microphone to the instrument case. To illustrate the effect of such a usage upon the frequency response of a Bruel and Kjaer dosimeter, the performance of such a dosimeter with and without the cable are compared in table 18. The difference between the two responses is small at low frequencies but becomes appreciable at frequencies above 3,000 Hz. The use of the cable causes a rather sharp dip around 5,000 Hz in the frequency response of the Bruel and Kjaer dosimeters with directly coupled microphones. This characteristic dip thus appears to be attributable to a wave interference effect.

TABLE 8. - Acoustic performance of Bendix dosimeters

Frequency, Hz	Sample 1 F	Sample 1 α	Sample 2 F	Sample 2 α	Sample 3 F	Sample 3 α	Sample mean $\bar{F}$	Sample mean $\bar{\alpha}$
100	0.659	-3.0	0.000	$-\infty$	0.050	-21.6	0.236	-10.4
125	.747	-2.1	.062	-20.1	.084	-17.7	.298	-8.8
160	.774	-1.8	.079	-18.3	.138	-14.3	.330	-8.0
200	.774	-1.8	.143	-14.0	.182	-12.3	.366	-7.3
250	.814	-1.5	.201	-11.6	.232	-10.5	.416	-6.3
315	.855	-1.1	.295	-8.8	.304	-8.6	.485	-5.2
400	.846	-1.2	.394	-6.7	.439	-5.9	.560	-4.2
500	.860	-1.1	.494	-5.1	.529	-4.6	.628	-3.4
630	.830	-1.3	.625	-3.4	.636	-3.3	.697	-2.6
800	.835	-1.3	.809	-1.5	.820	-1.4	.821	-1.4
1,000	.860	-1.1	.959	-.3	.969	-.2	.929	-.5
1,250	.896	-.8	1.090	.6	1.010	.1	.999	.0
1,600	.966	-.2	1.434	2.6	1.222	1.4	1.207	1.4
2,000	.976	-.2	1.585	3.3	1.458	2.7	1.340	2.1
2,500	1.176	1.2	1.839	4.4	1.670	3.7	1.562	3.2
3,150	1.189	1.2	1.716	3.9	1.950	4.8	1.618	3.5
4,000	1.490	2.9	1.822	4.3	1.892	4.6	1.735	4.0
5,000	1.462	2.7	1.632	3.5	1.788	4.2	1.627	3.5
6,300	1.452	2.7	2.228	5.8	2.160	5.6	1.947	4.8
8,000	1.540	3.1	2.594	6.9	2.467	6.5	2.200	5.7
Sound level, dbA	G	β	G	β	G	β	$\bar{G}$	$\bar{\beta}$
92	0.987	-0.1	0.970	-0.2	0.974	-0.2	0.977	-0.2
95	1.053	.4	1.052	.4	1.012	.1	1.039	.3
100	1.072	.5	1.050	.4	1.084	.6	1.069	.5
105	1.061	.4	1.060	.4	1.054	.4	1.058	.4
110	.983	-.1	1.009	.0	.988	-.1	.993	-.1
113	.946	-.4	.971	-.2	.960	-.3	.959	-.3
115	.893	-.8	.889	-.8	.928	-.5	.903	-.7
	C	γ	C	γ	C	γ	$\bar{C}$	$\bar{\gamma}$
Calibration factor	1.302	1.9	1.174	1.2	1.176	1.2	1.217	1.4
R at 88 dbA for 1 hour	9 percent		9 percent		9.5 percent		-	
115 dbA light activated at...	117 dbA		117 dbA		115 dbA		-	
1,000-Hz tone bursts: Crest factor / On time, percent	R/R_o	δ	R/R_o	δ	R/R_o	δ	$\overline{R/R_o}$	$\bar{\delta}$
2.0 / 60	0.872	-1.0	0.837	-1.3	0.809	-1.5	0.829	-1.3
2.4 / 40	.749	-2.1	.703	-2.5	.696	-2.6	.719	-2.4
3.5 / 20	.601	-3.7	.566	-4.1	.530	-4.6	.566	-4.1
5.0 / 10	.489	-5.2	.435	-6.1	.436	-6.0	.453	-5.7
Broadband noise, Crest factor = 4.3	0.701	-2.6	0.743	-2.1	0.749	-2.1	0.731	-2.3

TABLE 9. - Acoustic performance of Bruel and Kjaer dosimeters[1]

Frequency, Hz	Sample 1		Sample 2[2]		Sample 3		Sample mean[3]	
	F	α	F	α	F	α	$\overline{F}$	$\overline{\alpha}$
100	1.136	0.9	-	-	1.120	0.8	1.128	0.9
125	1.163	1.1	-	-	1.195	1.3	1.179	1.2
160	1.179	1.2	-	-	1.190	1.2	1.185	1.2
200	1.127	.9	-	-	1.142	1.0	1.134	.9
250	1.127	.9	-	-	1.165	1.1	1.146	1.0
315	1.070	.5	-	-	1.084	.6	1.077	.5
400	1.114	.8	-	-	1.108	.7	1.111	.8
500	1.070	.5	-	-	1.054	.4	1.062	.4
630	1.011	.1	-	-	1.030	.2	1.020	.2
800	.980	-.2	-	-	.994	.0	.987	-.1
1,000	.989	-.1	-	-	.976	-.2	.982	-.1
1,250	.935	-.5	-	-	.932	-.5	.934	-.5
1,600	1.015	.1	-	-	.908	-.7	.962	-.3
2,000	.968	-.2	-	-	.960	-.3	.964	-.3
2,500	.882	-.9	-	-	.993	.0	.938	-.5
3,150	.865	-1.0	-	-	1.021	.2	.943	-.4
4,000	1.071	.5	-	-	.927	-.6	.999	.0
5,000	.830	-1.3	-	-	.822	-1.4	.826	-1.4
6,300	.822	-1.4	-	-	.709	-2.5	.766	-1.9
8,000	.638	-3.2	-	-	.675	-2.8	.656	-3.0
Sound level, dbA	G	β	G	β	G	β	$\overline{G}$	$\overline{\beta}$
92	1.014	0.1	-	-	1.022	0.2	1.018	0.1
95	1.044	.3	-	-	1.026	.2	1.035	.2
100	.955	-.3	-	-	.964	-.3	.960	-.3
105	1.034	.2	-	-	1.018	.1	1.026	.2
110	.930	-.5	-	-	1.001	.0	.965	-.3
113	1.047	.3	-	-	.985	-.1	1.016	.1
115	.975	-.2	-	-	.984	-.1	.980	-.2
	C	γ	C	γ	C	γ	$\overline{C}$	$\overline{\gamma}$
Calibration factor	0.754	-2.0	-	-	0.766	-1.9	0.760	-2.0
R at 88 dbA for 1 hour	0 percent		-		0 percent		-	
115 dbA light activated at...	117 dbA		-		117 dbA		-	
1,000-Hz tone bursts	R/R_o	δ	R/R_o	δ	R/R_o	δ	$\overline{R/R_o}$	$\overline{\delta}$
Crest factor / On time, percent								
2.0 / 60	1.060	0.4	-	-	1.054	0.4	1.057	0.4
2.4 / 40	1.004	.0	-	-	1.086	.6	1.045	.3
3.5 / 20	.851	-1.2	-	-	.912	-.6	.882	-.9
5.0 / 10	.690	-2.7	-	-	.740	-2.2	.715	-2.4
Broadband noise, Crest factor = 4.3	0.960	-0.3	-	-	0.951	-0.4	0.956	-0.3

[1]Remote microphone.
[2]Unit malfunctioned.
[3]Averaged over samples 1 and 3 only.

TABLE 10. - Acoustic performance of Columbia Research dosimeters

Frequency, Hz	Sample 1		Sample 2		Sample 3		Sample mean	
	F	α	F	α	F	α	$\overline{F}$	$\overline{\alpha}$
100	0.675	-2.8	0.706	-2.5	0.860	-1.1	0.747	-2.1
125	.675	-2.8	.688	-2.7	.863	-1.1	.742	-2.2
160	.720	-2.4	.729	-2.3	.896	-.8	.782	-1.8
200	.733	-2.3	.766	-1.9	.886	-.9	.795	-1.7
250	.746	-2.1	.779	-1.8	.905	-.8	.810	-1.5
315	.756	-2.0	.790	-1.7	.897	-.8	.814	-1.5
400	.796	-1.7	.811	-1.5	.922	-.6	.843	-1.2
500	.818	-1.4	.808	-1.5	.947	-.4	.858	-1.1
630	.829	-1.3	.816	-1.4	.933	-.5	.859	-1.1
800	.846	-1.2	.855	-1.1	.951	-.4	.884	-.9
1,000	.891	-.8	.901	-.8	.973	-.2	.922	-.6
1,250	.941	-.4	.935	-.5	1.028	.2	.968	-.2
1,600	1.077	.5	.994	.0	.996	.0	1.022	.2
2,000	1.132	.9	1.152	1.0	1.136	.9	1.140	.9
2,500	1.416	2.4	1.193	1.3	1.208	1.3	1.272	1.7
3,150	1.572	3.3	1.505	2.9	1.144	1.0	1.407	2.4
4,000	1.435	2.6	1.380	2.3	1.143	1.0	1.319	2.0
5,000	1.410	2.4	1.279	1.8	1.150	1.0	1.280	1.8
6,300	1.400	2.4	1.553	3.2	1.216	1.4	1.390	2.4
8,000	1.139	.9	1.350	2.1	.942	.4	1.144	1.0
Sound level, dbA	G	β	G	β	G	β	$\overline{G}$	$\overline{\beta}$
92	0.930	-0.5	1.027	0.2	1.035	0.2	0.997	0.0
95	.924	-.6	.947	-.4	.983	-.1	.951	-.4
100	.916	-.6	.938	-.6	.951	-.4	.935	-.5
105	1.009	.1	.985	-.1	.994	.0	.996	.0
110	1.070	.5	.991	-.1	1.016	.1	1.026	.2
113	1.084	.6	1.064	.5	1.028	.2	1.059	.4
115	1.066	.5	1.053	.4	.995	.0	1.038	.3
	C	γ	C	γ	C	γ	$\overline{C}$	$\overline{\gamma}$
Calibration factor	1.238	1.5	0.918	-0.6	1.297	1.9	1.151	1.0
R at 88 dbA for 1 hour	0 percent		0 percent		1.4 percent		-	
115 dbA light activated at	113 dbA		115 dbA		113 dbA		-	
1,000-Hz tone bursts: Crest factor / On time, percent	R/R_o	δ	R/R_o	δ	R/R_o	δ	$\overline{R/R_o}$	$\overline{\delta}$
2.0 / 60	1.017	0.1	1.011	0.1	1.017	0.1	1.015	0.1
2.4 / 40	.993	.0	.984	-.1	.994	.0	.990	-.1
3.5 / 20	.912	-.7	.921	-.6	.930	-.5	920	-.6
5.0 / 10	.816	-1.4	.830	-1.3	.844	-1.2	.830	-1.3
Broadband noise, Crest factor = 4.3	0.977	-0.2	1.056	0.4	0.931	-0.5	0.988	-0.1

TABLE 11. - Acoustic performance of E. I. DuPont dosimeters

Frequency, Hz	Sample 1 F	Sample 1 α	Sample 2 F	Sample 2 α	Sample 3 F	Sample 3 α	Sample mean $\bar{F}$	Sample mean $\bar{\alpha}$
100	0.966	-0.2	0.728	-2.3	0.920	-0.6	0.871	-1.0
125	.902	-.7	.805	-1.6	.939	-.4	.882	-.9
160	.901	-.8	.885	-.9	.965	-.3	.917	-.6
200	.874	-.9	.885	-.9	.943	-.4	.900	-.8
250	.902	-.7	.920	-.6	.979	-.2	.934	-.5
315	.875	-.9	.885	-.9	.948	-.4	.903	-.7
400	.865	-1.0	.897	-.8	.945	-.4	.902	-.7
500	.865	-1.0	.910	-.7	.964	-.3	.913	-.7
630	.828	-1.3	.917	-.6	.931	-.5	.892	-.8
800	.916	-.6	.884	-.9	.920	-.6	.907	-.7
1,000	.914	-.6	.923	-.6	.964	-.3	.934	-.5
1,250	.871	-1.0	.962	-.3	.946	-.4	.926	-.6
1,600	1.015	.1	.989	-.1	1.053	.4	1.019	.1
2,000	.986	-.1	1.238	1.5	1.096	.7	1.107	.7
2,500	1.296	1.9	1.310	1.9	1.196	1.3	1.267	1.7
3,150	1.351	2.2	1.028	.2	.844	-1.2	1.074	.5
4,000	1.162	1.1	1.016	.1	.892	-.8	1.023	.2
5,000	.960	-.3	1.116	.8	1.074	.5	1.050	.4
6,300	1.157	1.1	1.310	1.9	1.197	1.3	1.221	1.4
8,000	1.385	2.3	1.394	2.4	1.281	1.8	1.353	2.2
Sound level, dbA	G	β	G	β	G	β	$\bar{G}$	$\bar{\beta}$
92	0.973	-0.2	0.978	-0.2	1.020	0.2	0.990	-0.1
95	1.054	.4	1.008	.1	.990	-.1	1.017	.1
100	1.041	.3	.968	-.2	.990	-.1	1.000	.0
105	.986	-.1	1.030	.2	1.016	.1	1.011	.1
110	.978	-.2	1.008	.1	.983	-.1	.990	-.1
113	.996	.0	1.014	.1	.998	.0	1.003	.0
115	.975	-.2	.996	.0	1.003	.0	.991	-.1
	C	γ	C	γ	C	γ	$\bar{C}$	$\bar{\gamma}$
Calibration factor	1.051	0.4	1.075	0.5	1.048	0.3	1.058	0.4
R at 88 dbA for 1 hour	0 percent		1.0 percent		0 percent		-	
115 dbA light activated at	115 dbA		117 dbA		117 dbA		-	
1,000-Hz tone bursts: Crest factor / On time, percent	R/R_o	δ	R/R_o	δ	R/R_o	δ	$\overline{R/R_o}$	$\bar{\delta}$
2.0 / 60	1.150	1.0	1.146	1.0	1.138	0.9	1.145	1.0
2.4 / 40	1.202	1.3	1.235	1.5	1.112	.7	1.183	1.2
3.5 / 20	1.224	1.4	1.234	1.5	1.254	1.6	1.237	1.5
5.0 / 10	1.175	1.2	1.172	1.2	1.172	1.2	1.173	1.2
Broadband noise, Crest factor = 4.3	1.006	0.0	0.961	-0.3	0.987	-0.1	0.985	-0.1

TABLE 12. - Acoustic performance of Edmont-Wilson dosimeters

Frequency, Hz	Sample 1		Sample 2		Sample 3		Sample mean	
	F	α	F	α	F	α	$\bar{F}$	$\bar{\alpha}$
100	0.808	-1.5	0.840	-1.3	0.744	-2.1	0.797	-1.6
125	.841	-1.3	.850	-1.2	.744	-2.1	.812	-1.5
160	.857	-1.1	.871	-1.0	.792	-1.7	.840	-1.3
200	.849	-1.2	.853	-1.1	.791	-1.7	.831	-1.3
250	.843	-1.3	.882	-.9	.818	-1.4	.848	-1.2
315	.829	-1.3	.863	-1.1	.823	-1.4	.838	-1.3
400	.855	-1.1	.879	-.9	.820	-1.4	.851	-1.2
500	.879	-.9	.856	-1.1	.862	-1.1	.866	-1.1
630	.855	-1.1	.862	-1.1	.959	-.3	.892	-.8
800	.925	-.6	.916	-.6	.933	-.5	.925	-.6
1,000	.993	-.1	.986	-.1	.920	-.6	.966	-.2
1,250	.975	-.2	.985	-.1	.937	-.4	.966	-.2
1,600	1.071	.5	1.024	.2	.970	-.2	1.022	.2
2,000	1.348	2.1	1.122	.8	1.182	1.2	1.217	1.4
2,500	1.104	.7	1.052	.4	1.535	3.1	1.230	1.5
3,150	1.230	1.5	1.086	.6	1.210	1.4	1.175	1.2
4,000	1.075	.5	.962	-.3	1.083	.6	1.040	.3
5,000	1.023	.2	.954	-.4	1.069	.5	1.015	.1
6,300	1.267	1.7	1.342	2.1	1.297	1.9	1.302	1.9
8,000	1.378	2.3	1.762	4.1	1.503	2.9	1.548	3.2
Sound level, dbA	G	β	G	β	G	β	$\bar{G}$	$\bar{\beta}$
92	1.004	0.0	0.994	0.0	0.986	-0.1	0.995	0.0
95	.975	-.2	.997	.0	1.002	.0	.991	-.1
100	1.024	.2	1.014	.1	.990	-.1	1.009	.1
105	.993	-.1	.993	-.1	1.008	.1	.998	.0
110	1.008	.1	.992	-.1	1.018	.1	1.006	.0
113	1.041	.3	1.036	.3	.997	.0	1.025	.2
115	.952	-.4	.972	-.2	1.001	.0	.975	-.2
	C	γ	C	γ	C	γ	$\bar{C}$	$\bar{\gamma}$
Calibration factor	1.088	0.6	1.034	0.2	1.089	0.6	1.070	0.5
R at 88 dbA for 1 hour	0 percent		0 percent		0 percent		-	
115 dbA light activated at	117 dbA		117 dbA		117 dbA		-	
1,000-Hz tone bursts	R/R_o	δ	R/R_o	δ	R/R_o	δ	$\overline{R/R_o}$	$\bar{\delta}$
Crest factor / On time, percent								
2.0 / 60	0.999	0.0	0.994	0.0	0.985	-0.1	0.993	0.0
2.4 / 40	.976	-.2	.940	-.4	.933	-.5	.950	-.4
3.5 / 20	.870	-1.0	.820	-1.4	.816	-1.4	.835	-1.3
5.0 / 10	.691	-2.7	.664	-3.0	.670	-2.9	.675	-2.8
Broadband noise, Crest factor = 4.3	0.912	-0.7	0.952	-0.4	0.891	-0.8	0.918	-0.6

TABLE 13. - Acoustic performance of General Radio dosimeters[1]

Frequency, Hz	Sample 1 F	Sample 1 α	Sample 2 F	Sample 2 α	Sample 3 F	Sample 3 α	Sample mean $\bar{F}$	Sample mean $\bar{\alpha}$
100	0.938	-0.5	1.024	0.2	0.877	-0.9	0.946	-0.4
125	.939	-.5	.836	-1.3	.933	-.5	.903	-.7
160	.957	-.3	.935	-.5	.982	-.1	.958	-.3
200	.922	-.6	.896	-.7	.952	-.4	.923	-.6
250	.979	-.2	.896	-.7	.992	-.1	.956	-.3
315	.973	-.2	.867	-1.1	.938	-.5	.926	-.6
400	.948	-.4	.867	-1.1	.944	-.4	.920	-.6
500	.918	-.6	.854	-1.2	.937	-.5	.903	-.7
630	.881	-.9	.822	-1.4	.930	-.5	.878	-.9
800	.922	-.6	.848	-1.2	.889	-.8	.886	-.9
1,000	.877	-.9	.921	-.6	.869	-1.0	.888	-.9
1,250	.881	-.9	.824	-1.4	.806	-1.6	.837	-1.2
1,600	.957	-.3	.883	-.9	.868	-1.0	.903	-.7
2,000	.986	-.1	.975	-.2	.914	-.6	.958	-.3
2,500	1.159	1.1	1.085	.6	.958	-.3	1.067	.5
3,150	1.255	1.6	1.165	1.1	1.107	.7	1.176	1.2
4,000	.958	-.3	1.294	1.8	1.056	.4	1.103	.7
5,000	1.223	1.4	1.517	3.0	1.206	1.4	1.315	1.9
6,300	1.186	1.2	1.384	2.3	1.352	2.2	1.307	1.9
8,000	1.125	.8	1.102	.7	1.538	3.1	1.255	1.6
Sound level, dbA	**G**	**β**	**G**	**β**	**G**	**β**	**$\bar{G}$**	**$\bar{\beta}$**
92	1.070	0.5	0.989	-0.1	0.996	0.0	1.018	0.1
95	1.070	.5	.980	-.2	.990	-.1	1.013	.1
100	1.008	.1	1.060	.4	.984	-.1	1.017	.1
105	1.018	.1	.988	-.1	1.020	.1	1.009	.1
110	.965	-.3	1.002	.0	1.004	.0	.990	-.1
113	.927	-.5	1.049	.3	1.018	.1	.998	.0
115	.943	-.4	.934	-.5	.989	-.1	.955	-.3
	C	**γ**	**C**	**γ**	**C**	**γ**	**$\bar{C}$**	**$\bar{\gamma}$**
Calibration factor	1.285	1.8	1.282	1.8	1.279	1.8	1.282	1.8
R at 88 dbA for 1 hour	12 percent		11 percent		9.5 percent		-	
115 dbA light activated at...	115 dbA		115 dbA		115 dbA		-	
1,000-Hz ton bursts	R/R_o	δ	R/R_o	δ	R/R_o	δ	$\overline{R/R_o}$	$\bar{\delta}$
Crest factor / On time, percent								
2.0 / 60	1.034	0.2	1.016	0.1	1.017	0.2	1.022	0.2
2.4 / 40	1.025	.2	1.020	.1	1.024	.2	1.023	.2
3.5 / 20	1.046	.3	1.043	.3	.999	.0	1.029	.2
5.0 / 10	1.074	.5	1.034	.2	.988	-.1	1.032	.2
Broadband noise, Crest factor = 4.3	0.896	-0.8	1.050	0.4	1.005	0.0	0.984	-0.1

[1]With remote microphone and wind screen.

TABLE 14. - Acoustic performance of Quest dosimeters

Frequency, Hz	Sample 1		Sample 2[1]		Sample 3		Sample mean[2]	
	F	α	F	α	F	α	$\bar{F}$	$\bar{\alpha}$
100	0.833	-1.3	0.000	-	0.892	-0.8	0.862	-1.1
125	.846	-1.2	1.182	-	.606	-3.6	.726	-2.3
160	.852	-1.2	1.135	-	.679	-2.8	.766	-1.9
200	.883	-.9	.000	-	1.042	.3	.962	-.3
250	.887	-.9	1.013	-	1.178	1.2	1.033	.2
315	.891	-.8	1.180	-	1.022	.2	.956	-.3
400	.897	-.8	.000	-	.950	-.4	.924	-.6
500	.895	-.8	.000	-	1.002	.0	.948	-.4
630	.881	-.9	1.180	-	.767	-1.9	.824	-1.4
800	.918	-.6	1.267	-	.843	-1.2	.880	-.9
1,000	.956	-.3	1.019	-	.806	-1.5	.881	-.9
1,250	1.020	.1	.940	-	.739	-2.2	.880	-.9
1,600	1.113	.7	.000	-	.784	-1.8	.948	-.4
2,000	1.094	.6	1.222	-	1.240	1.6	1.167	1.1
2,500	1.282	1.8	1.360	-	1.060	.4	1.171	1.1
3,150	1.323	2.0	1.264	-	1.162	1.1	1.243	1.6
4,000	1.161	1.1	.000	-	1.195	1.3	1.178	1.2
5,000	1.050	.4	.983	-	1.006	.0	1.028	.2
6,300	1.114	.7	1.779	-	1.512	3.0	1.313	1.9
8,000	1.108	.7	1.628	-	1.534	3.1	1.321	2.0
Sound level, dbA	G	β	B	β	G	β	$\bar{G}$	$\bar{\beta}$
92	0.998	0.0	0.000	-	1.263	1.7	1.131	0.9
95	1.022	.2	.000	-	1.154	1.0	1.088	.6
100	1.008	.1	1.019	-	.862	-1.1	.935	-.5
105	1.006	.0	1.351	-	.834	-1.3	.920	-.6
110	.970	-.2	1.527	-	.800	-1.6	.885	-.9
113	1.020	.1	1.566	-	.820	-1.4	.920	-.6
115	.976	-.2	1.444	-	1.264	1.7	1.120	.8
	C	γ	C	γ	C	γ	$\bar{C}$	$\bar{\gamma}$
Calibration factor	1.063	0.4	-	-	1.214	1.4	1.139	0.9
R at 88 dbA for 1 hour	0 percent		0 percent		0 percent		-	
115 dbA light activated at...	115 dbA		117 dbA		115 dbA		-	
1,000-Hz tone bursts: Crest factor / On time, percent	R/R_o	δ	R/R_o	δ	R/R_o	δ	$\overline{R/R_o}$	$\bar{\delta}$
2.0 / 60	1.012	0.1	1.010	-	1.028	0.2	1.020	0.1
2.4 / 40	.956	-.3	.970	-	1.032	.2	.994	.0
3.5 / 20	.860	-1.1	.820	-	.938	-.5	.899	-.8
5.0 / 10	.722	-2.4	.575	-	.806	-1.5	.764	-1.9
Broadband noise, Crest factor = 4.3	0.986	-0.1	1.205	-	1.040	0.3	1.013	0.1

TABLE 15. - Acoustic performance of Tracoustics dosimeters

Frequency, Hz	Sample 1 F	Sample 1 α	Sample 2 F	Sample 2 α	Sample 3 F	Sample 3 α	Sample mean $\bar{F}$	Sample mean $\bar{\alpha}$
100	0.740	-2.2	0.780	-1.8	0.700	-2.6	0.740	-2.2
125	.824	-1.4	.810	-1.5	.750	-2.1	.795	-1.7
160	.924	-.6	.859	-1.1	.777	-1.8	.853	-1.1
200	.924	-.6	.857	-1.1	.772	-1.8	.851	-1.1
250	.924	-.6	.871	-1.0	.815	-1.5	.870	-1.0
315	.924	-.6	.878	-.9	.829	-1.4	.877	-1.0
400	.972	-.1	.899	-.8	.845	-1.2	.905	-.7
500	.922	-.6	.905	-.7	.840	-1.3	.889	-.8
630	.926	-.6	.920	-.6	.843	-1.2	.896	-.8
800	.987	-.1	.942	-.4	.869	-1.0	.933	-.5
1,000	.991	-.1	1.014	.1	.934	-.5	.980	-.2
1,250	.996	.0	1.020	.1	.954	-.3	.990	-.1
1,600	1.080	.5	1.142	1.0	1.157	1.0	1.126	.9
2,000	1.139	.9	1.210	1.4	1.257	1.6	1.202	1.3
2,500	1.172	1.2	1.067	.5	1.182	1.2	1.140	1.0
3,150	1.355	2.2	1.368	2.3	1.610	3.4	1.444	2.6
4,000	.950	-.4	1.018	.1	1.151	1.0	1.040	.3
5,000	1.077	.2	.874	-1.0	1.006	.0	.986	-.1
6,300	1.422	2.5	1.422	2.5	1.329	2.0	1.391	2.4
8,000	.950	-.4	1.150	1.0	1.377	2.3	1.159	1.1
Sound level, dbA	G	β	G	β	G	β	$\bar{G}$	$\bar{\beta}$
92	1.013	0.1	1.033	0.2	1.012	0.1	1.019	0.1
95	1.028	.2	.982	-.1	1.072	.5	1.028	.2
100	.946	-.4	.986	-.1	.966	-.2	.966	-.2
105	.978	-.2	1.007	.0	.980	-.2	.988	-.1
110	1.048	.3	1.014	.1	.980	-.2	1.014	.1
113	1.021	.2	.974	-.2	1.001	.0	.999	.0
115	.966	-.2	1.002	.0	.987	-.1	.985	-.1
	C	γ	C	γ	C	γ	$\bar{C}$	$\bar{\gamma}$
Calibration factor	1.186	1.2	1.096	0.7	1.213	1.4	1.165	1.1
R at 88 dbA for 1 hour	0.2 percent		0 percent		0 percent		-	
115 dbA light activated at...	115 dbA		115 dbA		115 dbA		-	
1,000-Hz tone bursts: Crest factor / On time, percent	R/R_o	δ	R/R_o	δ	R/R_o	δ	$\overline{R/R_o}$	$\bar{\delta}$
2.0 / 60	0.807	-1.6	0.813	-1.5	0.811	-1.5	0.810	-1.5
2.4 / 40	.640	-3.2	.648	-3.1	.662	-3.0	.650	-3.1
3.5 / 20	.404	-6.5	.410	-6.4	.416	-6.3	.410	-6.4
5.0 / 10	.279	-9.2	.296	-8.8	.288	-9.0	.288	-9.0
Broadband noise, Crest factor = 4.3	0.876	-1.0	0.932	-0.5	0.937	-0.5	0.915	-0.6

TABLE 16. - Acoustic performance of Triplett dosimeters

Frequency, Hz	Sample 1 F	Sample 1 α	Sample 2 F	Sample 2 α	Sample 3 F	Sample 3 α	Sample mean $\bar{F}$	Sample mean $\bar{\alpha}$
100	0.086	0.6	1.029	0.2	1.062	0.4	1.059	0.4
125	1.081	.6	1.120	.8	1.084	.6	1.095	.7
160	1.137	.9	1.145	1.0	1.136	.9	1.139	.9
200	1.149	1.0	1.187	1.2	1.151	1.0	1.162	1.1
250	1.156	1.0	1.167	1.1	1.175	1.2	1.166	1.1
315	1.126	.9	1.145	1.0	1.123	.8	1.131	.9
400	1.074	.5	1.124	.8	1.112	.7	1.103	.7
500	1.122	.8	1.118	.8	1.084	.6	1.108	.7
630	1.086	.6	1.058	.4	1.028	.2	1.057	.4
800	1.071	.5	1.048	.3	1.010	.1	1.043	.3
1,000	1.044	.3	1.032	.2	.971	-.2	1.016	.1
1,250	1.029	.2	1.027	.2	.949	-.4	1.002	.0
1,600	.997	.0	1.006	.0	.924	-.6	.976	-.2
2,000	.943	-.4	.984	-.1	.940	-.4	.956	-.3
2,500	.979	-.2	.912	-.7	1.013	.1	.968	-.2
3,150	.893	-.8	.881	-.9	1.037	.3	.937	-.5
4,000	.830	-1.3	.797	-1.6	.936	-.4	.852	-1.2
5,000	.785	-1.8	.788	-1.7	.903	-.7	.825	-1.4
6,300	.770	-1.9	.752	-2.0	.746	-2.1	.756	-2.0
8,000	.649	-3.1	.679	-2.8	.614	-3.5	.647	-3.1
Sound level, dbA	G	β	G	β	G	β	$\bar{G}$	$\bar{\beta}$
92	1.216	1.4	1.006	0.0	1.088	0.6	1.103	0.7
95	1.045	.3	.976	-.2	.979	-.2	1.000	.0
100	.926	-.6	.949	-.4	.896	-.8	.924	-.6
105	.928	-.5	.989	-.1	.961	-.3	.959	-.3
110	.941	-.4	1.003	.0	1.000	.0	.981	-.1
113	.995	.0	1.042	.3	1.042	.3	1.026	.2
115	.952	-.4	1.034	.2	1.032	.2	1.006	.0
	C	γ	C	γ	C	γ	C	γ
Calibration factor	1.156	1.0	1.154	1.0	1.194	1.3	1.168	1.1
R at 88 dbA for 1 hour	17.4 percent		0 percent		0 percent		-	
115 dbA light activated at	113 dbA		113 dbA		113 dbA		-	
1,000-Hz tone bursts: Crest factor / On time, percent	R/R_o	δ	R/R_o	δ	R/R_o	δ	$\overline{R/R_o}$	$\bar{\delta}$
2.0 / 60	0.999	0.0	1.006	0.0	1.016	0.1	1.007	0.0
2.4 / 40	.986	-.1	.995	.0	.988	-.1	.990	-.1
3.5 / 20	.920	-.6	.915	-.6	.918	-.6	.918	-.6
5.0 / 10	.823	-1.4	.826	-1.4	.824	-1.4	.824	-1.4
Broadband noise, Crest factor = 4.3	0.920	0.6	0.967	-0.2	0.992	-0.1	0.960	-0.3

TABLE 17. - Acoustic performance of Welsh dosimeters

Frequency, Hz	Sample 1		Sample 2		Sample 3		Sample mean	
	F	α	F	α	F	α	$\bar{F}$	$\bar{\alpha}$
100	0.317	-8.3	0.363	-7.3	0.258	-9.8	0.313	-8.4
125	.321	-8.2	.377	-7.0	.340	-7.8	.346	-7.7
160	.373	-7.1	.421	-6.2	.256	-9.9	.350	-7.6
200	.407	-6.5	.423	-6.1	.517	-4.8	.449	-5.8
250	.433	-6.0	.478	-5.3	.610	-3.6	.507	-4.9
315	.430	-6.0	.494	-5.1	.550	-4.3	.491	-5.1
400	.467	-5.5	.520	-4.7	.526	-4.6	.504	-4.9
500	.469	-5.5	.539	-4.5	.632	-3.3	.547	-4.4
630	.455	-5.7	.521	-4.7	.436	-6.0	.471	-5.4
800	.478	-5.3	.564	-4.1	.704	-2.5	.582	-3.9
1,000	.476	-5.4	.576	-4.0	.626	-3.4	.581	-3.9
1,250	.505	-4.9	.636	-3.4	.692	-2.6	.611	-3.6
1,600	.540	-4.5	.684	-2.7	.758	-2.0	.661	-3.0
2,000	.665	-2.9	.817	-1.4	.934	-.5	.805	-1.5
2,500	.812	-1.5	1.084	.6	1.202	1.3	1.033	.2
3,150	1.115	.8	1.287	1.8	.973	-.2	1.125	.8
4,000	1.606	3.4	2.049	7.3	2.128	5.4	1.928	4.7
5,000	2.754	7.3	2.476	6.5	2.124	5.4	2.451	6.5
6,300	3.747	9.5	2.892	7.7	1.838	4.4	2.826	7.5
8,000	3.626	9.3	2.785	7.4	3.901	9.8	3.437	8.9
Sound leve, dbA	G	β	G	β	G	β	$\bar{G}$	$\bar{\beta}$
92[1]	0.000	-	0.000	-	0.000	-	0.000	-
95	.947	-0.4	.959	-0.3	.705	-2.4	.870	-1.0
100	.947	-.4	.985	-.1	1.142	1.0	1.025	.2
105	1.021	.1	1.025	.2	1.045	.3	1.030	.2
110	1.025	.2	1.029	.2	.771	-1.9	.942	.4
113	1.008	.1	1.035	.2	1.196	1.3	1.080	.6
115	1.048	.3	.967	-.2	1.142	1.0	1.052	.4
	C	γ	C	γ	C	γ	$\bar{C}$	$\bar{\gamma}$
Calibration factor	2.053	5.2	1.573	3.3	1.232	1.5	1.619	3.5
R at 88 dbA for 1 hour	0 percent		0 percent		0 percent		-	
115 dbA light activated at...	115 dbA		115 dbA		117 dbA		-	
1,000-Hz tone bursts: Crest factor / On time, percent	R/R_o	δ	R/R_o	δ	R/R_o	δ	$\overline{R/R_o}$	$\bar{\delta}$
2.0 / 60	0.851	-1.2	0.876	-0.9	0.566	-4.1	0.764	-1.9
2.4 / 40	.732	-2.2	.764	-1.9	.775	-1.8	.757	-2.0
3.5 / 20	.588	-3.8	.619	-3.5	.704	-2.5	.637	-3.2
5.0 / 10	.484	-5.2	.519	-4.7	.614	-3.6	.539	-4.5
Broadband noise, Crest factor = 4.3	0.425	-6.2	0.547	-4.4	0.652	-3.1	0.541	-4.4

[1]92 dbA entry not included in normalizing the data.

TABLE 18. - Frequency responses of a Bruel and Kjaer dosimeter with and without a microphone cable

Frequency	Remote microphone		Integral microphone	
	F	α	F	α
100	1.051	0.4	1.037	0.3
125	1.090	.6	1.157	1.0
160	1.165	1.1	1.163	1.1
200	1.132	.9	1.025	.2
250	1.121	.8	1.077	.5
315	1.107	.7	1.094	.7
400	1.132	.9	1.079	.6
500	1.047	.3	1.075	.5
630	1.032	.2	1.025	.2
800	1.002	.0	.980	-.1
1,000	.953	-.4	.935	-.5
1,250	.905	-.7	1.084	.6
1,600	.958	-.3	1.019	.1
2,000	.853	-1.1	1.115	.8
2,500	.940	-.4	1.115	.8
3,150	1.034	.2	1.136	.9
4,000	.935	-.5	.594	-3.8
5,000	.985	-.1	.361	-7.3
6,300	.810	-1.5	.693	-2.6
8,000	.748	-2.1	1.237	1.5

The battery life expectancies are given in table 19. For dosimeters that use dry cells the calculations are based on Eveready battery data for batteries of the specified types. All units except the Tracoustics model provided a means for checking the condition of the battery. Thus, a zero residual life span for dosimeters other than Tracoustics would result when the battery failed prior to a "weak" battery indication by the dosimeter or its companion equipment.

TABLE 19. - Battery life expectancies

Brand name	Type of battery	Primary life span, hours	Residual life span, hours
Bendis	2-Eveready 216.	[1]250	0
Bruel and Kjaer[2]	.....do.....	65	32
Columbia Research	1-Eveready 226.	200	50
E. I. DuPont	1-Eveready 216.	[1]200	0
Edmont-Wilson	Rechargeable	[1]12	0
General Radio	1-Eveready 216.	150	100
Quest[3]	Rechargeable	[1]10	0
Tracoustics	.....do.....	[4]20	0
Triplett	1-Eveready 226.	180	150
Welsh	2-Eveready 412.	20	15

[1]Battery failure occurred before weak battery condition was indicated.
[2]Only one unit tested.
[3]Only two units tested.
[4]Battery condition indicator not provided.

EXPERIMENTAL ERROR

Errors from many sources can find the way into the results of an experiment. The prominent sources of error in our procedure which are more or less random in nature are likely to have stemmed from variations in the microphone positions and orientations and the reading of the sound level to which a dosimeter is exposed. Allowing for an error component, equation 6 can be modified to read:

$$R_{ijk} = 2^{\gamma/5}\, 2^{\alpha_i/5}\, 2^{\beta_j/5}\, 2^{\varepsilon_{ik}/5}\, D_{ij}\,, \tag{19}$$

in which the index k identifies the test runs, and ε_{ik} accounts for the error in level measured in db. It is specifically assumed here that the expected size of this error depends on frequency but not on level. The experimental design was set up with two replications on one sample unit from each brand of dosimeters. Identifying the two runs as run 1 and run 2, then from equation 19,

$$R_{ij1} = D_{ij}\, 2^{\gamma/5}\, 2^{\alpha_i/5}\, 2^{\beta_j/5}\, 2^{\varepsilon_{i1}/5}\,,$$

$$R_{ij2} = D_{ij}\, 2^{\gamma/5}\, 2^{\alpha_i/5}\, 2^{\beta_j/5}\, 2^{\varepsilon_{i2}/5}\,,$$

from which as a measure of error is derived

$$e = \left|\log \frac{R_{ij1}}{R_{ij2}}\right| = \frac{\log 2}{5}\,|\Delta\varepsilon_i|\,, \tag{20}$$

where $$\Delta\varepsilon_i = \varepsilon_{i1} - \varepsilon_{i2}.$$

With only two replications for each brand of dosimeters, any estimate of the parameters of the experimental error by brand would certainly not be reliable. Better estimates can be made if the errors in the replication of different dosimeters may be "pooled." The validity of pooled estimates rests on the premise that the errors are drawn from the same population. Since different microphones were involved, one can argue that the errors are statistically distinct. A preliminary examination of our data indicated that the replication errors for the various dosimeters did not vary much from brand to brand, thus pooling across the brands appeared to be acceptable. The examination also suggested the possibility of the data obtained at different frequencies into two groups: One group covering the 100- to 1,250-Hz range, and the other, 1,600- to 8,000-Hz range. Pooling of data across frequency within each range also appeared to be acceptable.

Unfortunately, because of instrument problems of one kind or another only seven sets of complete replications could be utilized for estimating the error

parameters. The replication errors over the range of frequencies are compiled in table 20. From this compilation the e_{50} (50 percentile) and e_{95} (95 percentile) values were computed which in turn yielded the corresponding $\Delta\epsilon$ values in db according to equation 20. The appropriate ϵ values taken as half the $\Delta\epsilon$ values are tabulated in table 21. These parameters in the low-frequency range are consistent with the replication errors obtained for 1,000-Hz test tone at various levels as given in table 22, and thus supports the assumption that the error is essentially only frequency dependent. It is to be noted that in our analysis any drift in performance of the dosimeters was not separately considered. In reality, this source of variation which may be significant (since there could be a time lag of several weeks between replications (see table 4) has been lumped into those of table 21. Conceivably the size of the experimental errors could be reduced if this latter source of error was eliminated.

TABLE 20. - Replication error e at different frequencies

Frequency, Hz	Brand identification						
	Bruel and Kjaer	Columbia	E.I. DuPont	Edmont-Wilson	General Radio	Tracoustics	Triplett
100.....	0.0202	0.0164	0.0431	0.0098	0.0549	0.1163	0.0156
125.....	.0065	.0254	.0115	.0184	.0185	.0327	.0337
160.....	.0237	.0157	.0012	.0076	.0006	.0243	.0111
200.....	.0273	.0209	.0075	.0117	.0152	.0243	.0208
250.....	.0045	.0259	.0004	.0095	.0224	.0090	.0137
315.....	.0056	.0187	.0240	.0065	.0021	.0020	.0112
400.....	.0129	.0099	.0181	.0073	.0080	.0116	.0192
500.....	.0169	.0236	.0242	.0357	.0224	.0163	.0276
630.....	.0063	.0145	.0327	.0050	.0284	.0000	.0021
800.....	.0039	.0138	.0013	.0340	.0135	.0083	.0017
1,000.....	.0040	.0051	.0002	.0086	.0084	.0116	.0138
1,250.....	.0163	.0089	.0309	.0143	.0017	.0158	.0078
1,600.....	.0282	.0197	.0610	.0402	.0069	.0106	.0010
2,000.....	.0213	.0096	.0739	.0841	.0266	.0298	.0149
2,500.....	.0359	.0199	.0284	.0040	.0289	.0090	.0193
3,150.....	.1034	.0143	.0429	.0198	.0395	.0038	.0298
4,000.....	.0131	.0001	.0040	.0112	.0047	.0990	.0047
5,000.....	.1774	.0105	.0662	.0606	.0357	.1852	.0690
6,300.....	.0368	.0002	.0070	.0743	.0426	.0009	.0340
8,000.....	.0232	.0009	.0442	.0087	.0835	.1320	.0280

TABLE 21. - Estimated parameters of experimental error

Frequency range, Hz	50 percentile value		95 percentile value	
	e_{50}	ϵ_{50}	e_{95}	ϵ_{95}
100-1,250.....	0.015	±0.1 db	0.035	±0.3 db
1,600-8,000.....	.025	±.2 db	.100	±.8 db

TABLE 22. - Replication error e at different sound levels

Sound level, db	Brand identification						
	Bruel and Kjaer	Columbia	E. I. DuPont	Edmont-Wilson	General Radio	Tracoustics	Triplett
92.....	0.0004	0.0216	0.0002	0.0042	0.0126	0.0193	0.0057
95.....	.0008	.0118	.0238	.0025	.0402	.0049	.0033
100.....	.0036	.0051	.0002	.0086	.0084	.0141	.0138
105.....	.0201	.0079	.0236	.0089	.0057	.0017	.0235
110.....	.0191	.0022	.0180	.0143	.0100	.0086	.0096
113.....	.0150	.0059	.0407	.0131	.0305	.0433	.0075
115.....	.0278	.0019	.0206	.0011	.0174	.0048	.0197

CONCLUSIONS

The tests generally proceeded smoothly without any unanticipated problems. As it turned out the experimental control was within the tolerance aimed for in our design. A few areas or situations in which improvements in our procedure could be made can be described as follows:

1. The loudspeaker was not powerful enough at the lowest test frequencies. This condition necessitated the location of the dosimeter microphone at a closer distance to the loudspeaker than was considered desirable. The location of the microphones in the near-field of the loudspeaker may have contributed to the obvious large replication errors at 100 Hz.

2. The rather large replication errors at frequencies above 1,600 Hz are probably mainly due to the variation of the orientation of the monitor microphone relative to the dosimeter microphone in the two replications. This error might be substantially reduced if a more rigid test rig could be used.

3. The time constants of the rectifying circuits of the dosimeters were not measured, since there was reluctancy to "break into" the instruments. The time constant of a dosimeter could conceivably influence the dosage produced by the dosimeter when it is exposed to a signal whose level fluctuates. This possibility would complicate the interpretation of the data obtained with tone bursts or broadband noise stimulus. In making our interpretation regarding the crest handling characteristics, a time constant of at least 250 msec was implicitly assumed.

4. In determining the life expectancy of dry cells, the current draw was measured with the instrument turned on but not accumulating any dosage.

The current draw should go up when dosage accumulation occurs. With some dosimeters, relatively large transients are generated when the counter is being advanced. These complicating factors plus the fact that the battery life span is not solely dependent on the average current draw make any calculation based on current draw alone not very reliable. Thus, the life spans given in table 19 may be realistic for some models but for others they could be much greater than what can be achieved in actual use. A more dependable but much more time-consuming procedure is to operate a given unit in a prescribed sound field until the battery fails.

Regarding the dosimeters included in this round of tests, some general comments can be made as follows:

1. Dosimeters with rechargeable batteries on occasions appeared to behave erratically. The notable exception in this respect was the Edmont-Wilson units, which functioned consistently.

2. All dosimeters except those by Tracoustics have means for the user to check the condition of the battery pack. Most such checks are provided by an indicating lamp which gradually dims as the battery voltage drops. This, in our view, is really not a good method, as it may be difficult for a user to decide when the battery should be replaced. In our battery life tests, the battery was considered weak only if the light went out completely. Many units malfunctioned before that happened. It is felt that an indicating meter such as that used in the General Radio model or a device with a sharp cutoff such as the lamp used in the Bruel and Kjaer model constitutes a more desirable setup.

3. In field applications there may be occasions when a dosimeter must be turned off to prevent unwanted accumulations. At such times it is essential that the already accumulated dosage is not accidentally wiped out. A number of dosimeters (indicated in appendix C) do not provide such a standby mode to hold the dosage.

4. When the dosage accumulated by a dosimeter exceeds the capacity of its readout, a condition of overflow is said to exist. If overflow occurs, the actual readout will not have any meaning. This is perhaps not a serious problem with dosimeters possessing a high readout capacity such as the Bruel and Kjaer and the DuPont models. For units with a low readout capacity, overflow may occur frequently in the field application of such units. In any case an overflow indicator would be a desirable feature that is not found in any of the models except the Bruel and Kjaer dosimeters which in such an eventuality will give a "blank" display.

REFERENCES

1. Stewart, K. C., and Y. Yen. Noise Dosimeter Performance. BuMines RI 7876, 1974, 39 pp.

2. U.S. Code of Federal Regulations. Title 30--Mineral Resources; Chapter I--Bureau of Mines, Department of the Interior; Subchapter O--Coal Mine Health and Safety; Part 70--Mandatory Health Standards--Underground Coal Mines; Subpart F--Noise Standard. Federal Register, v. 36, No. 130, July 7, 1971, pp. 12739-12741.

3. American National Standards Institute. Specification for Sound Level Meters, SI.4-1971, 1971, 30 pp.

APPENDIX A.--NOMENCLATURE

The following symbols are used in this report:

A	ANSI A-weighting correction at a given frequency or a band of frequencies, db.
C	Calibration factor of readout (= $2^{\gamma/5}$).
C.F.	Crest factor.
D	Noise exposure dosage, percent of maximum allowed under the Coal Mine Health and Safety Act.
e	Replication error parameter.
F	Frequency factor of readout (= $2^{\alpha/5}$).
G	Time-level tradeoff factor of readout (= $2^{\beta/5}$).
i,j,k	Indices for identifying frequency, level, or replication of tests.
L	Unweighted sound pressure level, db re 0.0002 dyne/cm^2.
L_A	A-weighted sound pressure level, db re 0.0002 dyne/cm^2.
L_A'	Weighted sound pressure level as effected by a dosimeter.
L_{max}	Measured maximum peak sound pressure level.
L_{rms}	Measured rms sound pressure level.
P_e	Effective amplitude of a tone burst.
P_{max}	Maximum amplitude of a measured p.
P_p	Peak amplitude of a tone burst.
P_{rms}	Root-mean-square amplitude of a measured p.
R	Dosimeter readout, percent.
R_o	Expected dosimeter readout, percent.
t	Time of exposure, hours.
U	Percent of signal on-time.
α	Deviation of a dosimeter's weighting characteristic from the ANSI specified values, db.

β Deviation in terms of sound level due to departure of a dosimeter's time--level tradeoff rate from that specified by the Coal Mine Health and Safety Act, db.

γ Calibration error, db.

δ Deviation of dosimeter readout R from its expected readout R_o, db.

ε Experimental error, db.

APPENDIX B.--NORMAL VERSUS RANDOM INCIDENCE RESPONSES OF MICROPHONES

The response of a microphone, as a rule, is defined as the ratio of its output to the incident sound pressure in the absence of the microphone. When defined in this way, the response of a microphone becomes dependent upon its orientation with respect to the incident sound field as the pressure exerted on the microphone will vary with its orientation. In particular, the response of a microphone elicited by a normally incident sound wave is known as its "normal incidence" response. On the other hand the "random incidence" response of the microphone is defined as the expected response of the microphone when the sound wave may be incident upon the microphone from any direction with equal probability. In practice, the departure of the normal incidence response from the random incidence response at a given frequency is primarily determined by the geometry of the microphone and thus will be different for microphones of different sizes.

In evaluating dosimeters it is the random incidence response that applies, since it is the response that is called for in the ANSI Standard (see table 2 of text). An experimental determination of the random incidence response involves, in principle, a determination of the response at all angles of incidence which is obviously a very tedious task. To circumvent that difficulty, the authors decided to rely on published data on microphone responses rather than attempting to carry out independent evaluations. The data of interest here concern the differences between the normal incidence response (S_{normal}) and the random incidence response (S_{random}). A compilation of such data for three microphone diameters is shown in table B-1. No entry is made in the table for frequencies below 1,250 Hz, as the differences at those frequencies are practically zero.

TABLE B-1. - Difference between normal incidence response S_{normal} and random incidence response S_{random} for three microphones

($s = S_{normal} - S_{random}$, db)

Microphone diameter, inches	[1] 1-1/8	[2] 15/16	[2] 1/2
1,250	0.2	0.2	0.0
1,600	.4	.4	.2
2,000	.8	.8	.3
2,500	1.2	1.2	.5
3,150	1.8	1.8	.8
4,000	2.4	2.2	1.0
5,000	3.2	2.8	1.3
6,300	4.2	3.5	1.7
8,000	6.0	5.0	3.0

[1] From Shure Brothers, Inc., data.
[2] From Bruel and Kjaer Instruments, Inc., data.

The reader will recall that in the test setup both the monitor mirophone and the dosimeter microphone were placed to receive a normally incident test

signal. First, consider a dosimeter microphone having the same diameter as the monitor microphone. In this instance, the sound pressure detected by the monitor microphone could be interpreted as the random incidence pressure without introducing any error, since the difference between the normal and random incidence pressures acting on the respective microphones must be identical. This will not be the case, if there is a departure between the pressure differences which will in general be true if the microphones are of different diameters (see table B-1). In the latter case, a correction must be applied to the sound pressure level as indicated by the monitor system (treated as the random incidence pressure) to yield the proper random incidence level for the dosimeter microphone. This correction can simply be obtained by subtracting the s value for the monitor microphone from the s value for the microphone under consideration.

For example, consider the 1-1/8-inch dosimeter microphone at 8,000 Hz. Assume the monitor microphone registered 100 db which by definition must be the sound level seen by the dosimeter microphone also. Now, if we were to pretend that the 100 db indication really was the result of a randomly incident sound field then the dosimeter microphone would have overresponded by 6 minus 5 = 1 db thus the sound pressure level should be adjusted upward by 1 db to account for the discrepancy.

To demonstrate the procedure algebraically, let L_m be the sound pressure level as indicated by the monitor system, $\overline{L}_m$ be the sound pressure level if the sound field were random; then if the sound pressure level in both cases are identical

$$\overline{L}_m = L_m - s_m . \tag{B-1}$$

where s_m is the difference in responses between the two kinds of sound field for the monitor microphone as given in table B-1. Similarly for the dosimeter microphone

$$\overline{L}_d = L_d - s_d . \tag{B-2}$$

Now, if we were to directly measure the random incidence response of the dosimeter, $\overline{L}_m$ must be interpreted as the actual sound pressure to which the dosimeter microphone was exposed. Thus, setting $\overline{L}_d = \overline{L}_m$, the above two equations would lead to the result

$$\overline{L}_d = L_m + (s_d - s_m), \tag{B-3}$$

the quantity within the parentheses being the correction looked for. The appropriate corrections for the three dosimeter microphone sizes appear in table 6 of the text.

APPENDIX C.--SUPPLEMENTARY INFORMATION ON DOSIMETERS

Brand	Readout type	Maximum readout, percent	Readout upon overflow	Dosage retention with power off	Monitor weight, oz
Bendix.....	LED.....	255	Recycles to 0..	Yes	10
Bruel and Kjaer.	LED.....	9,999	Blank display..	No	10
Columbia.....	LED.....	199.9	Recycles to 100	No	12
E.I. DuPont...	Mechanical counter..	3,200	Stops at 3200..	Yes	8
Edmont-Wilson.	.....do.....	999.9	Recycles to 0..	Yes	28
General Radio.	LED.....	999	.....do.....	Yes	8
Quest.....	Mechanical counter..	999.9	.....do.....	Yes	25
Tracoustics...	Gas discharge tubes.	999.9	.....do.....	No	13
Triplett.....	LED.....	199.9	Recycles to 100	No	12
Welsh.....	Mechanical counter..	999.9	Recycles to 0..	Yes	16

INT.-BU.OF MINES,PGH.,PA. 22467

3477--54
Lot-42

[illegible]

THE LIBRARY OF CONGRESS

DEC 77
BOUND BY
HNM

LIBRARY OF CONGRESS
0 002 959 698 0